LAE

Техническая информация (eng)

Системы контроля

DL28W

LAE DL28W

1. INTRODUCTION

DL28W is a flexible data logging system consisting of:

- DL28W data logging module;
- DL28_SW software for programming of DL28W, retrieving and displaying logged data from it.

DL28W may work as a standalone module, with its own NTC10K probe, digital input and changeover alarm relay, which activates in case of alarm condition.

Moreover, the DL28W may be used as a master to log data coming from up to 4 connected peripherals via the RS485 line and using ModBus ASCII protocol.

DL28W must be first configured by means of the DL28_SW PC software, then it can be used in the field, where it will collect data. The logged values may at any time be retrieved via the connected USB drive, Bluetooth™ or USB cable.

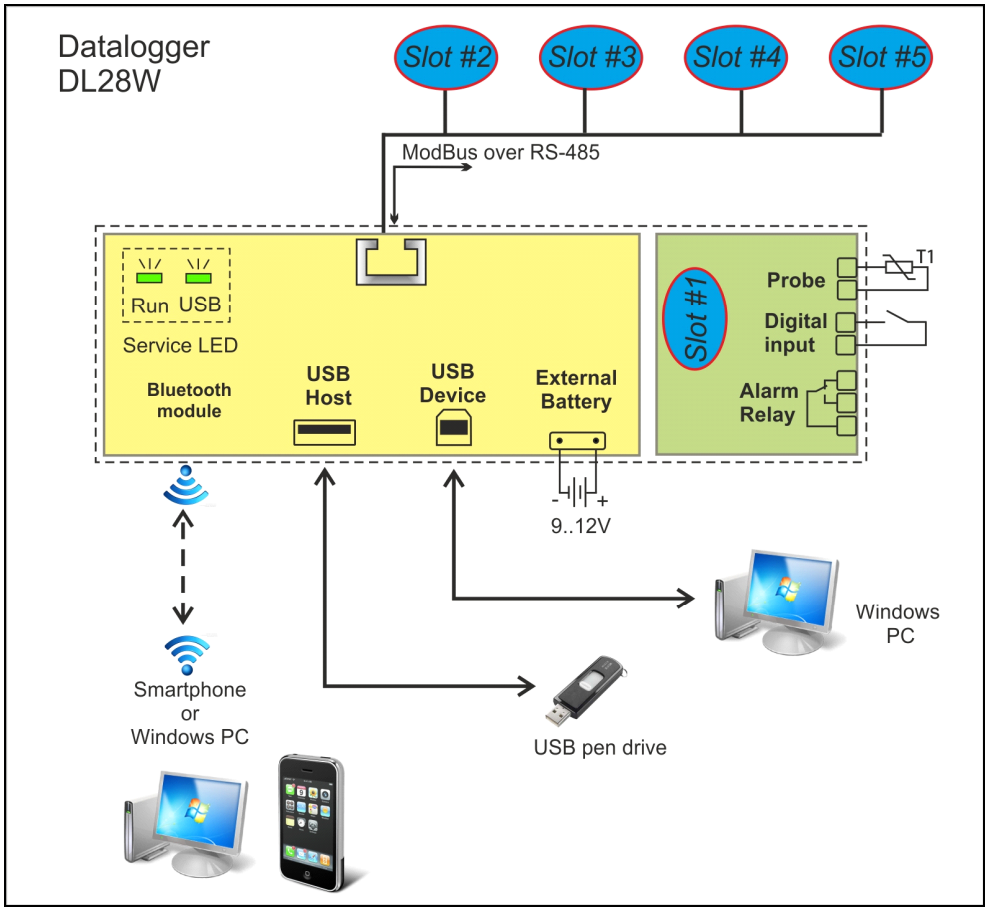

Figure 1 - DL28W components

2. DESCRIPTION

2.1. LED

- RUN LED

  Power up : 5 flashings per second during initialization;

  Run : 1 flashing per second. Logging in progress;

  Error : 3 short flashings every 2 seconds, in case of communication error with the connected devices (slot#2…slot#5);

- USB LED

  Normally off, this LED will blink when logged data are transferred to a connected USB drive. At the end of the transfer operation, the LED will stay lit.

2.2. SLOT

The datalogger DL28W features one NTC10K probe input, one digital input and one relay output. These three I/O values can be logged under the name of “Slot#1”.

The datalogger can also log values taken from external devices called “Slot #2”, “Slot #3”, “Slo t#4” and “Slot #5” in the DL28_SW software.

2.3. RJ-45 MODBUS CONNECTION

Connector for a 2-wire cable used to link up to four external devices. The protocol used is ModBus ASCII, baud 9600, 7 data bits, Even parity, 1 stop bit.

Every LAE Electronic controller fitted with RS485 is compatible with this system.

2.4. USB DEVICE

Connector for a USB cable to a PC running DL28_SW software.

Used to set/read the datalogger configuration, and retrieve data stored in a datalogger. The data are imported directly into the DL28_SW software.

2.5. USB HOST

Connector for a USB pen drive.

It’s used to retrieve data stored in the datalogger and to save them in a USB pen drive. The data in the USB can then be imported to a PC via the DL28_SW software.

2.6. BLUETOOTH®

Optional internal module that enables the communication with Android™[1] Smartphone or PC via Bluetooth®.

2.7. EXTERNAL BATTERY

This connector is suitable for an optional external battery, which will be used to continue the logging in case of a power failure.

3. TECHNICAL DATA

Temperature Input Probe	Type	NTC 10KΩ @ 25°C
	Range	-50... 110°C
	Accuracy	<0.5°C
Output Alarm Relay	Max. Load	5(1)A; 240Vac
Max. No. devices		4x RS485
Internal Mass Memory		4 MByte
Bluetooth®	Specification compliant	V2.1
	Range	class-2
USB	Connection Type	A2.0, B2.0
Internal buffer battery		>20 day, self-rechargeable
External Battery	Voltage	7…12V
	Consumption	75mAh
	Connector	XAP-02V-1 (JST)
Power supply		100...240 Vac, 50/60 Hz, 3W
Operating Conditions		-10 … +50°C; 15% … 80% r.H.